2025/11/18 15:23:42

1400 > F1-6-2 TORQUE CONVERTER 2.8:1 RATIO DRIVE PLATE & TRANSMISSION DIPSTICK

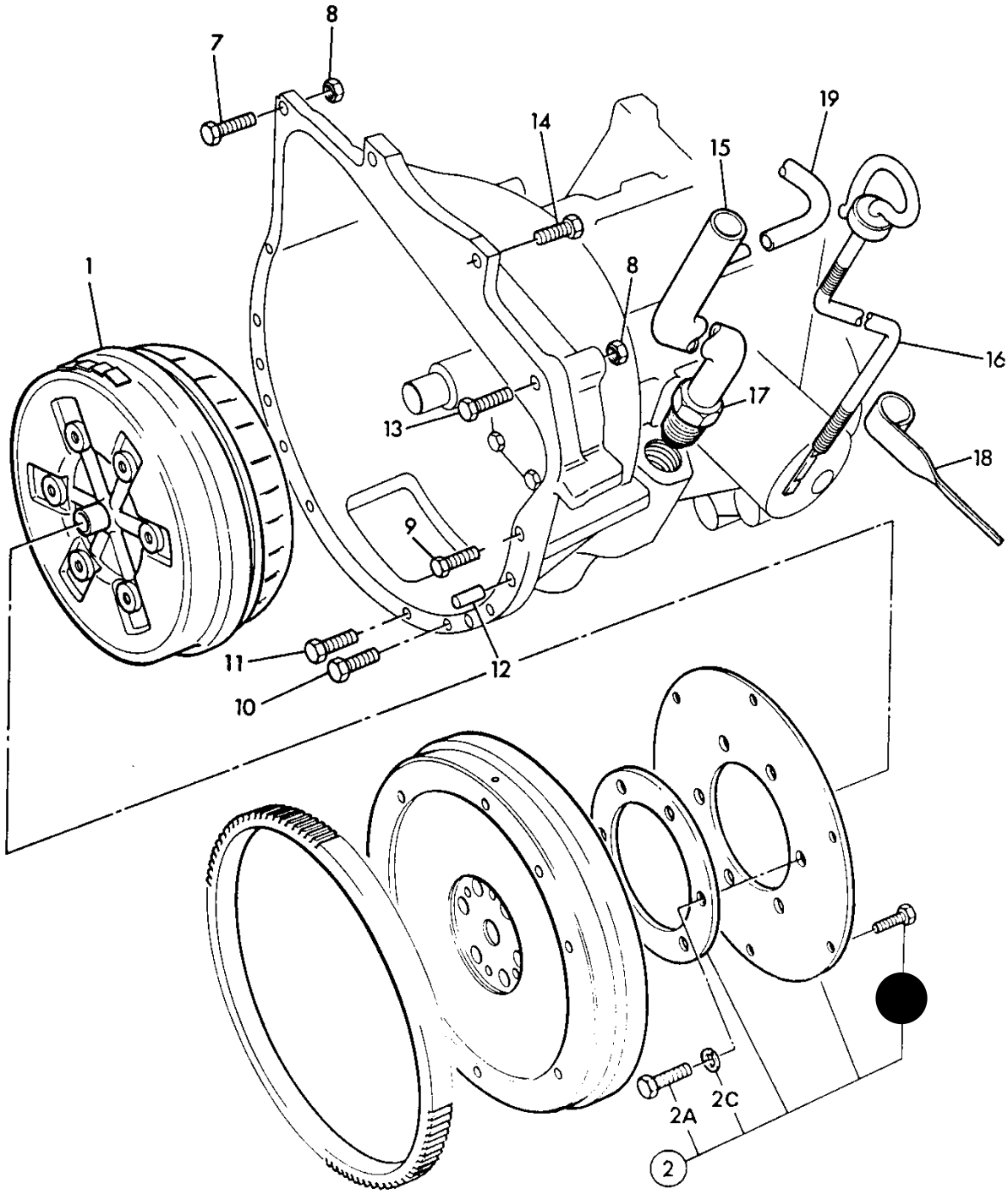
8
7
19
14
15
1
8
16
13
17
18
9
11
12
10
2A
2C
2
085932

1	03/300001	Converter 2.67:1 ratio 3 brown spots	1
1	03/300001N	Transmission Torque converter SSL New Exchange	1
1	03/300001R	TBA TORQ CONVERTER 2.8 001 STOCK Reman	1
2	04/500300	Kit-drive plate	1
2A	:04/500303	Bolt	6
2B	:04/500304	Bolt Supersession >	6
2C	:04/500305	Washer plain	6
7	1315/3512	Bolt	1
8	1370/0403Z	Nut Lock, M12 < Supersession	2
9	1315/3514	Bolt	5
10	1315/3516Z	Bolt M12 x 70mm < Supersession	4
11	1315/0511Z	Bolt M12 x 45mm < Supersession	2
12	02/101370	Dowel < Supersession	2
13	1315/3520	Bolt Supersession >	1
14	1315/3509Z	Bolt M12x35 Grade 8.8 < Supersession	2
15	123/51700	Tube filler	1
16	123/00987	Dipstick gearbox < Supersession	1

17	155/10600	Nut Male 1" & Seal Assembly < Supersession *Seal only comes with the nut*	1
17A	:904/20334	Kit-seal & ferrule Supersession >	1