2025/10/11 13:27:04

212S [T2] > B2-1-31 CANOPY

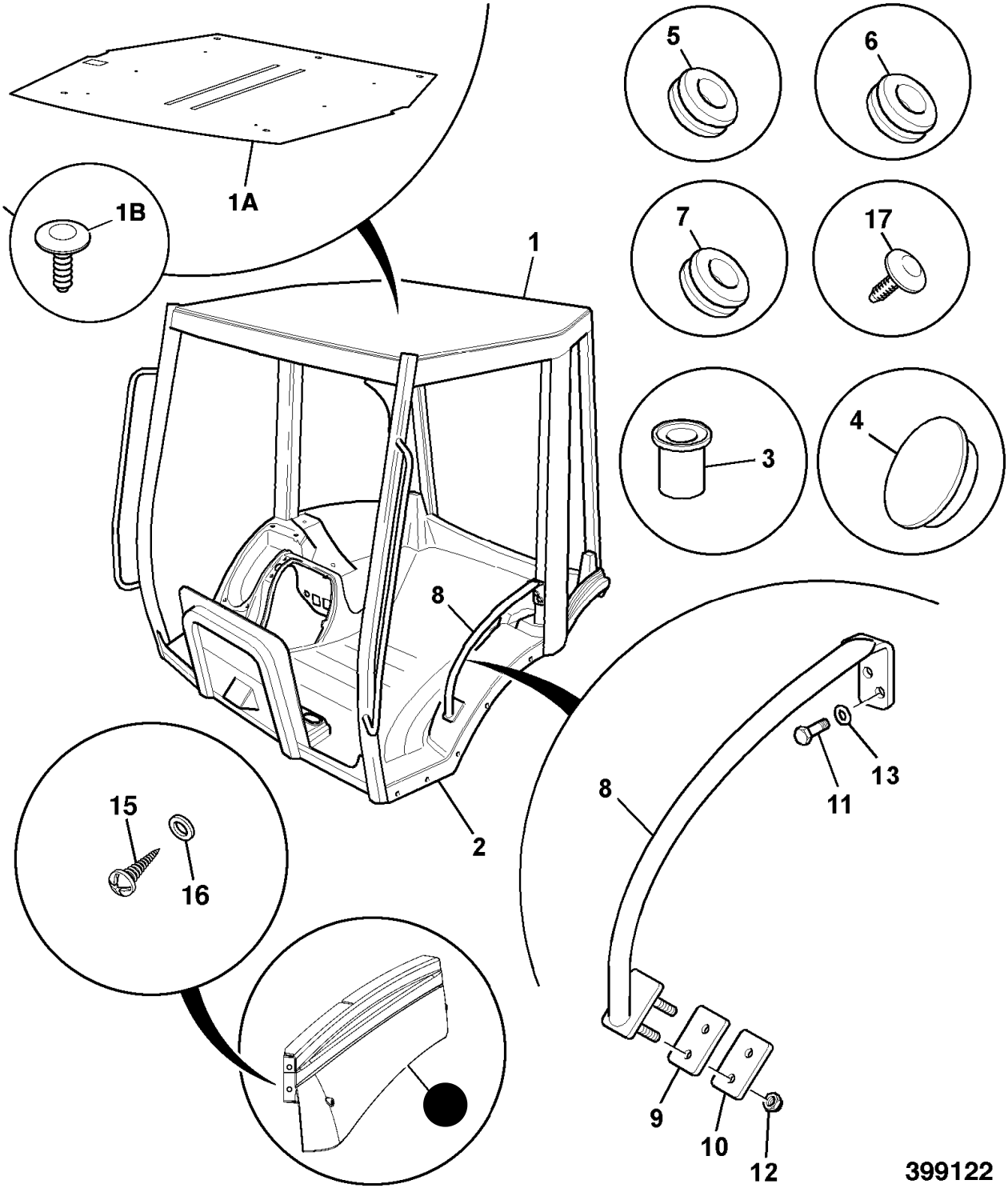

A	Not for sale	Canopy assembly NLA see TI 2/465 Supersession >
1	Not for sale	Canopy assembly NLA see TI 2/465 Supersession >
1A	331/47846	Liner canopy roof Fitted from Dec04
1B	826/10758	Fastener fir tree
2	Not for sale	None serviced part
3	:826/01101	Nut Rivet, M6 M6 Rivet nut
3	:826/01102	Nut Rivet, M8 M8 Rivet nut
3	:826/01105	Rivet nut M10 Supersession >
3	:826/01249	Nut Rrivet M10 M10 rivet nut
3	:826/11015	Nut Rivet, Splined M6 cab floor
4	:123/05740	Plug Blanking 30mm inner B post
5	:835/10084	Plug blanking black,11mm Rear window rail
6	:835/10085	Plug blanking black,12mm Outer B post
7	:826/10901	Plug blanking 8mm fir tree black
7	:835/10086	Plug blanking black,9mm Roof and right hand A post
8	:331/26559	Rail left hand grab canopy build
9	:331/25550	Gasket grab handle canopy
10	Not for sale	Plate spreader canopy grab rail Supersession >

11	:826/01768	Screw M6 x 25 < Supersession
12	:1370/0201Z	Nut Standard M8 Supersession >
13	:1420/0008Z	Washer Plain M10 Supersession >
14	:331/25920	Moulding blank filter housing canopy Supersession > *331/34686 found in supersession chain*
14A	826/01314	Nut M6 jacknut
15	:1315/0207Z	Setscrew M6x25 Supersession >
16	:1412/0001Z	Washer 1/4" Large Supersession >
17	:826/10901	Plug blanking 8mm fir tree black Top rail
18	⃠ Not for sale	'See Remark' C post mouldings see B2-25-20
99	4103/3201	Adhesive Sika 552, 310ml Black to hold item 1A > No Longer Available