2025/9/26 10:18:53

E4-4-2 RAM, EXTENSION INNER

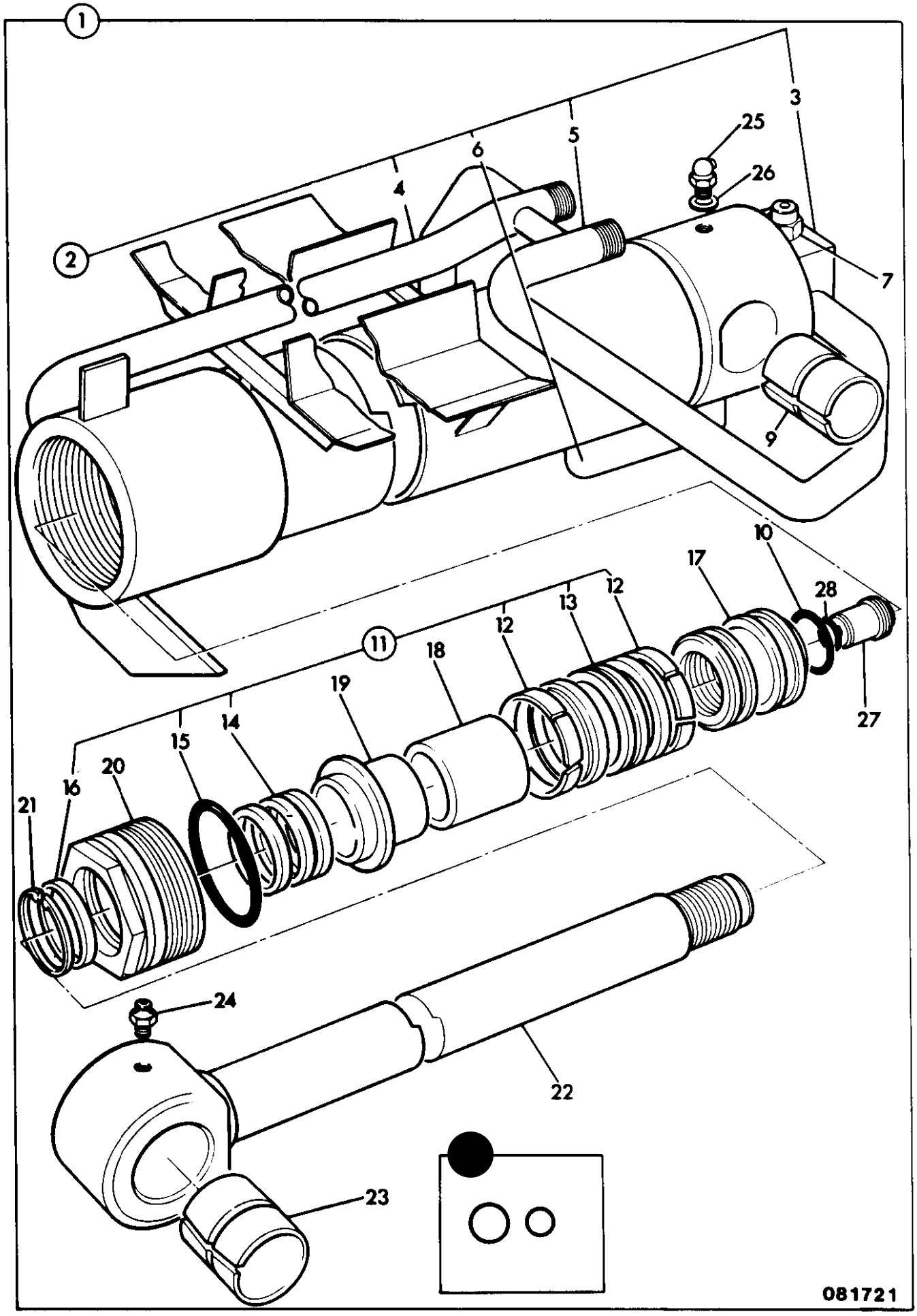
1
2
3
4
5
6
7
9
10
11
12
12
13
14
15
16
17
18
19
20
21
22
23
24
25
26
27
28
081721

1	⃠ Not for sale	Ram inner extension > No Longer Available	1
2A	::557/07008	Tray hoses	2
2	⃠ Not for sale	Cylinder Supersession >	1
3	⃠ Not for sale	Body check valve < Supersession	1
4	⃠ Not for sale	Pipe rod side > No Longer Available	1
5	::658/00864	Pipe	1
6	::658/00865	Pipe > No Longer Available	1
7	:25/913600	Cartridge check valve	1
8	::25/949303	Kit-seal	1
9	:1209/0023	Bush	1
10	:2400/0215	O Ring	1
11	⃠ Not for sale	'See Remark' Seal Kit	1
12	::2411/7609	Ring back-up 90mm cyl I.D.	2
13	::2411/7509	Seal piston 90mm cyl I.D.	1
14	⃠ Not for sale	Seal gland 60mm piston rod > No Longer Available	1
14	::2411/5208	Seal gland 60mm piston rod *<M* < Supersession 2411/5208 N/A use 2411/0408A & 2411/7708	1
15	::2407/0321	O Ring	1
16	::2411/8408	Seal wiper < Supersession	1
17	::595/10004	Head piston < Supersession	1

18	:557/06701	Spacer > No Longer Available	1
19	:559/09401	Gland bearing > No Longer Available	1
20	:594/00005	Cap end < Supersession	1
21	:559/00106	Circlip	1
22	:557/06900	Rod piston > No Longer Available	1
23	:1208/0015	Bush Spring < Supersession	1
24	:1450/0001	Nipple Grease Straight 1/8" < Supersession	1
25	:1450/1001	Nipple Grease 90 DEG. Angle < Supersession	1
26	:1403/0001	Washer Aluminium < Supersession	1
27	⃠ Not for sale	Valve make - up Supersession >	1